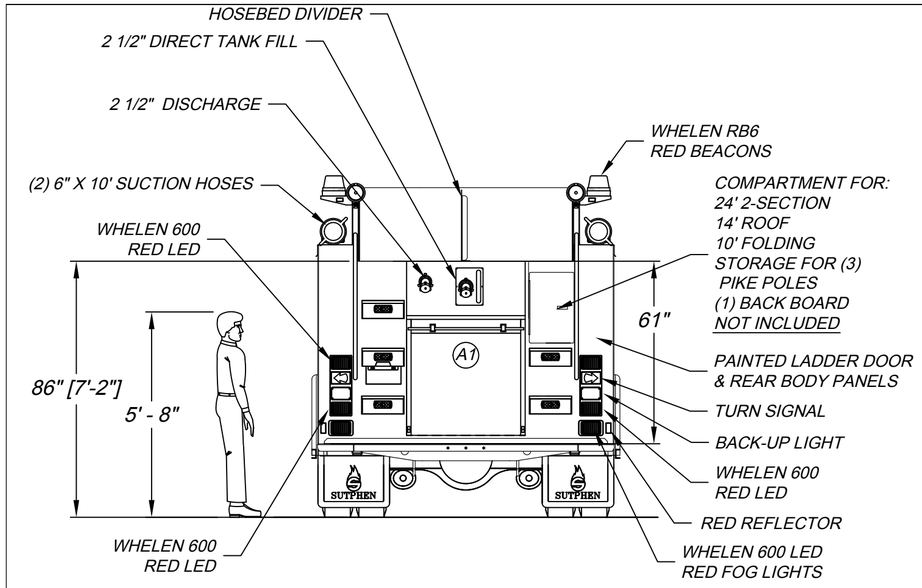

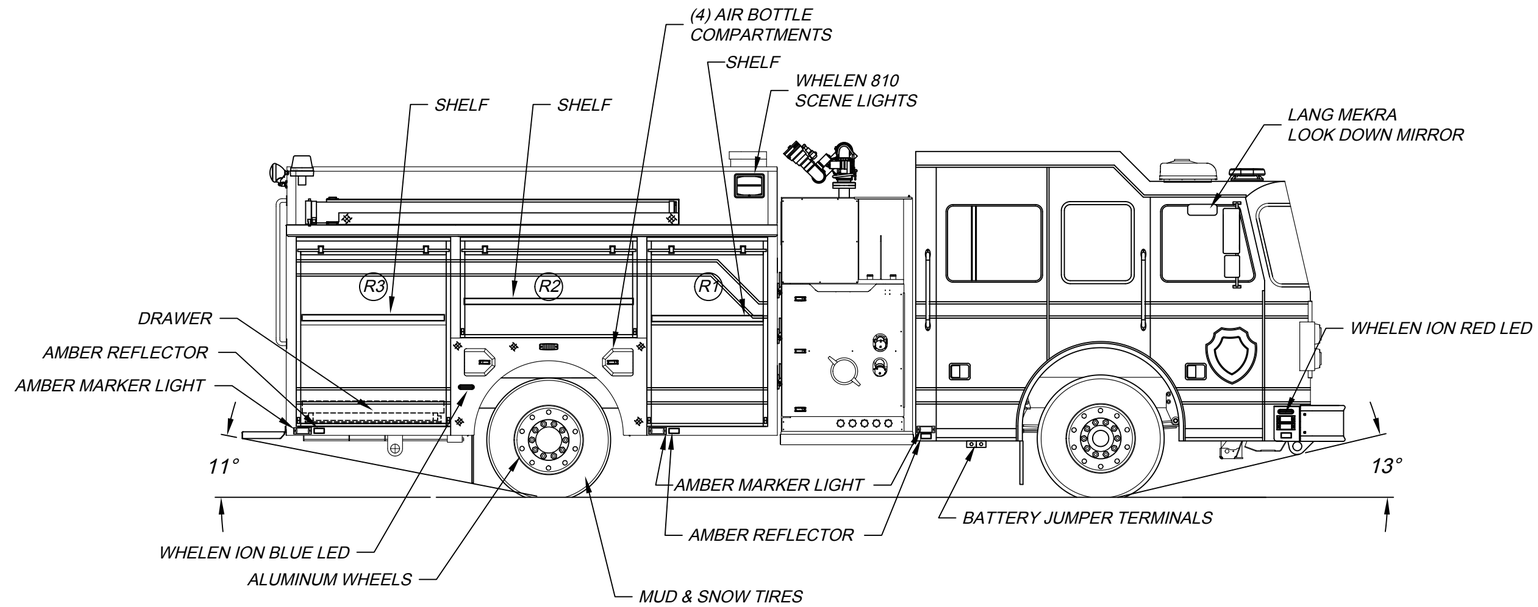

LEFT SIDE COMPARTMENTATION				
COMPT	DOORS	INSIDE DIMENSIONS	DOOR OPENING DIMENSIONS	VOLUME
L1	ROLL-UP	40"W X 66"H X 26"D	37 1/2"W X 56 1/2"H	37.4 CU. FT.
L2	ROLL-UP	59"W X 31 1/2"H X 26"D	56 1/4"W X 27"H	28.4 CU. FT.
L3	ROLL-UP	51 1/2"W X 66"H X 26"D	48 3/4"W X 56 1/2"H	47.4 CU. FT.

RIGHT SIDE COMPARTMENTATION					
COMPT	DOORS	INSIDE DIMENSIONS	DOOR OPENING DIMENSIONS	VOLUME	
R1	ROLL-UP	40"W X 66"H X 26"D	37 1/2"W X 56 1/2"H	28.5 CU. FT.	11" DEEP, UPPER
R2	ROLL-UP	59"W X 31 1/2"H X 11"D	56 1/4"W X 27"H	13.7 CU. FT.	
R3	ROLL-UP	51 1/2"W X 66"H X 26"D	48 3/4"W X 56 1/2"H	36 CU. FT.	11" DEEP, UPPER

REAR STEP COMPARTMENT				
COMPT	DOORS	INSIDE DIMENSIONS	DOOR OPENING DIMENSIONS	VOLUME
A1	ROLL-UP	39 1/2"W X 44"H X 31"D	36 3/4"W X 34 1/4"H	31.2 CU. FT.

TOTAL STORAGE: 222 CU. FT.

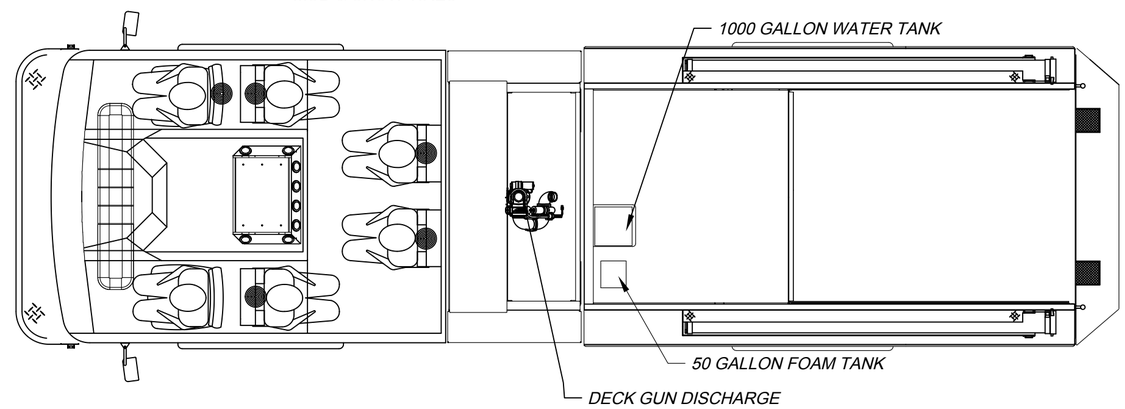

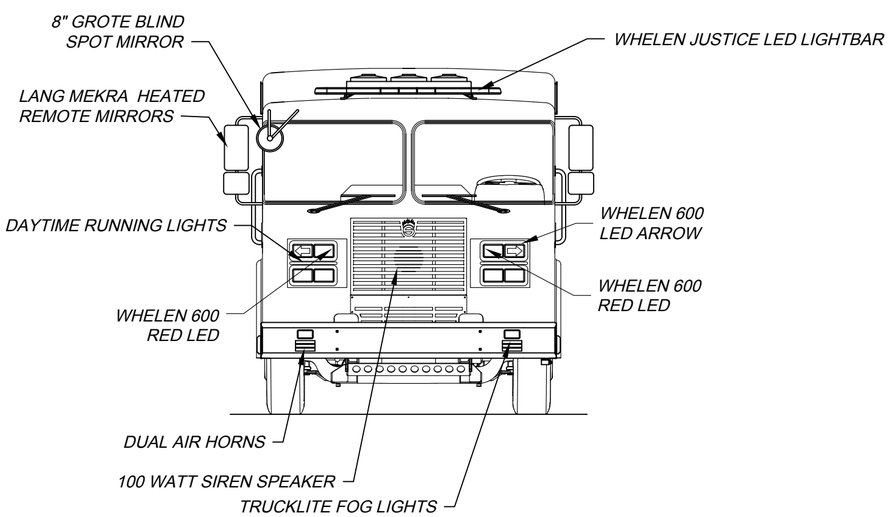

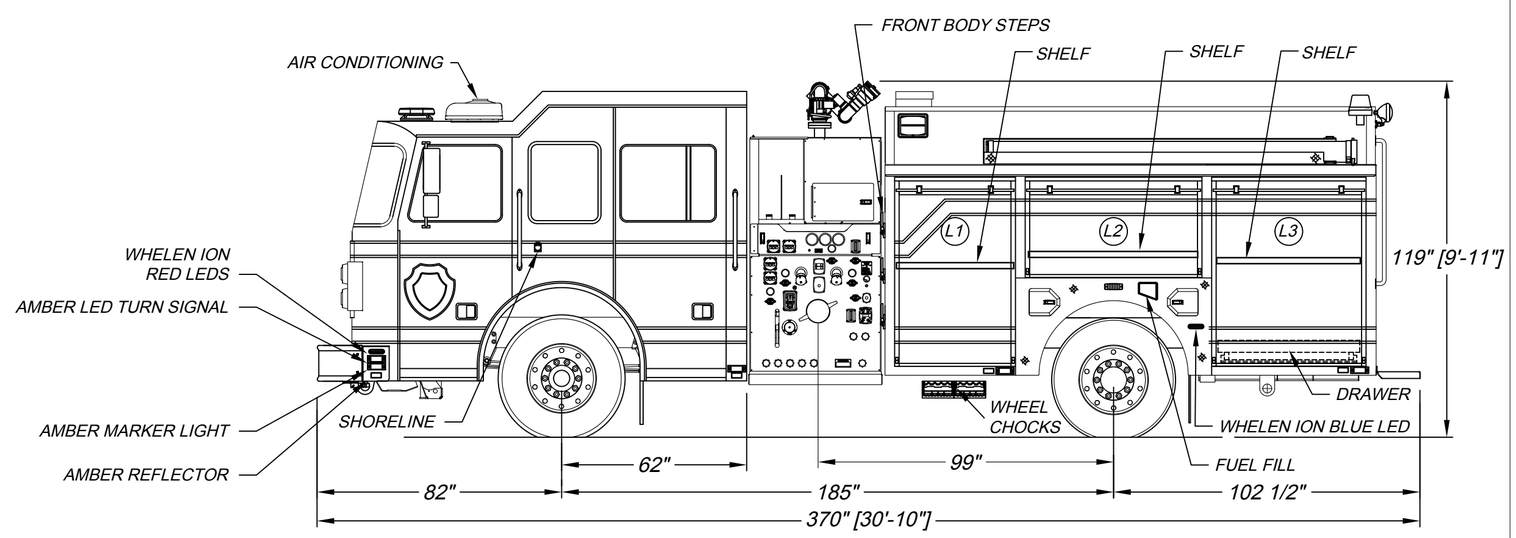

DIMENSIONS SHOWN ON THIS DRAWING ARE APPROXIMATE AND ARE SUBJECT TO MINOR DEVIATIONS DURING CONSTRUCTION.

IN THE EVENT OF A DISCREPANCY BETWEEN THE SUTPHEN SPECIFICATIONS AND DRAWING, THE SUTPHEN SPECIFICATIONS SHALL PREVAIL.

DRAWING IS FOR REFERENCE ONLY. SOME ITEMS PROPOSED MAY NOT BE SHOWN OR NOTED.

CUSTOMER APPROVAL

NAME:

TITLE:

DATE:

REV.	DESCRIPTION	BY	DATE
A	REVISED PER SHOP ORDER	JNH	2/11/2019

DRAWN BY: J.HAULMAN

DATE: 1/14/2019

MFG. FACILITY: SPRINGFIELD

SUTPHEN

HEFEI FIRE BRIGADE
CHINA

PROGRAM 1 CUSTOM PUMPER, G2 BODY

DWG. NO.: HS-6381

THIS PRINT IS PROVIDED ON A RESTRICTED BASIS AND IS NOT TO BE USED IN ANY WAY DETRIMENTAL TO THE INTEREST OF SUTPHEN CORPORATION.