HOSE BED
200' - 2.5"
200' - 1.75"
1,500' - 5"
200' - 1.75"
200' - 2.5"

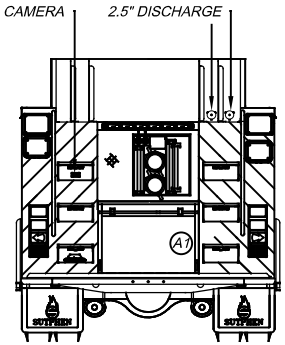

LADDER CHUTE
30' 3 SECTION
14' ROOF
10' FOLDING
STORAGE FOR (2)
PIKE POLES & (2)
10' SUCTION HOSES

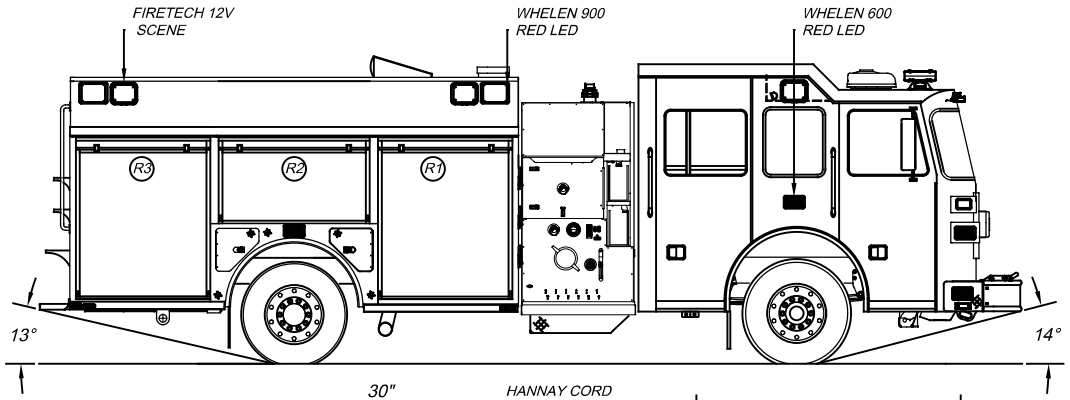

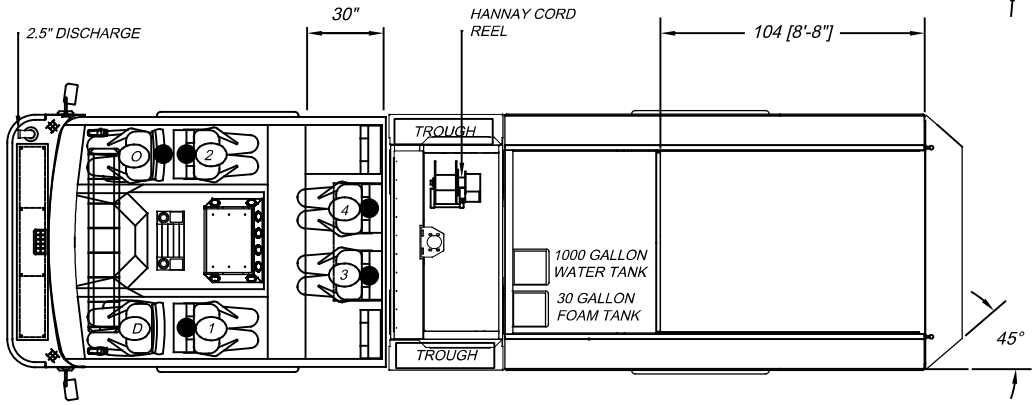

LEFT SIDE COMPARTMENTATION				
COMPT	DOORS	INSIDE DIMENSIONS	DOOR OPENING DIMENSIONS	VOLUME
L1	ROLL-UP	51 1/2"W X 66"H X 26"D	48 3/4" X 56 1/2"H	37.4 CU. FT.
L2	ROLL-UP	59"W X 31 1/2"H X 26"D	56 1/4"W X 27"H	28.4 CU. FT.
L3	ROLL-UP	51 1/2"W X 66"H X 26"D	48 3/4"W X 56 1/2"H	47.4 CU. FT.

RIGHT SIDE COMPARTMENTATION				
COMPT	DOORS	INSIDE DIMENSIONS	DOOR OPENING DIMENSIONS	VOLUME
R1	ROLL-UP	51 1/2"W X 66"H X 26"D	48 3/4"W X 56 1/2"H	37.4 CU. FT.
R2	ROLL-UP	59"W X 31 1/2"H X 26"D	56 1/4"W X 27"H	28.4 CU. FT.
R3	ROLL-UP	51 1/2"W X 66"H X 26"D	48 3/4"W X 56 1/2"H	47.4 CU. FT.

REAR STEP COMPARTMENT				
COMPT	DOORS	INSIDE DIMENSIONS	DOOR OPENING DIMENSIONS	VOLUME
A1	ROLL-UP	39 1/2"W X 28"H X 31"D	36 3/4"W X 19"H	19.8 CU. FT.

BASE STORAGE: 246 CU. FT.

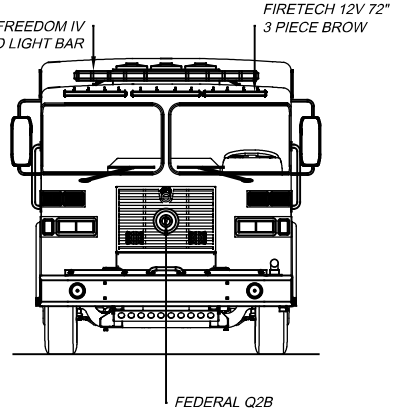

SINGLE TONE
YELLOW

MAXIMUM HEIGHT
10' 1"

MAXIMUM LENGTH
32' 4"

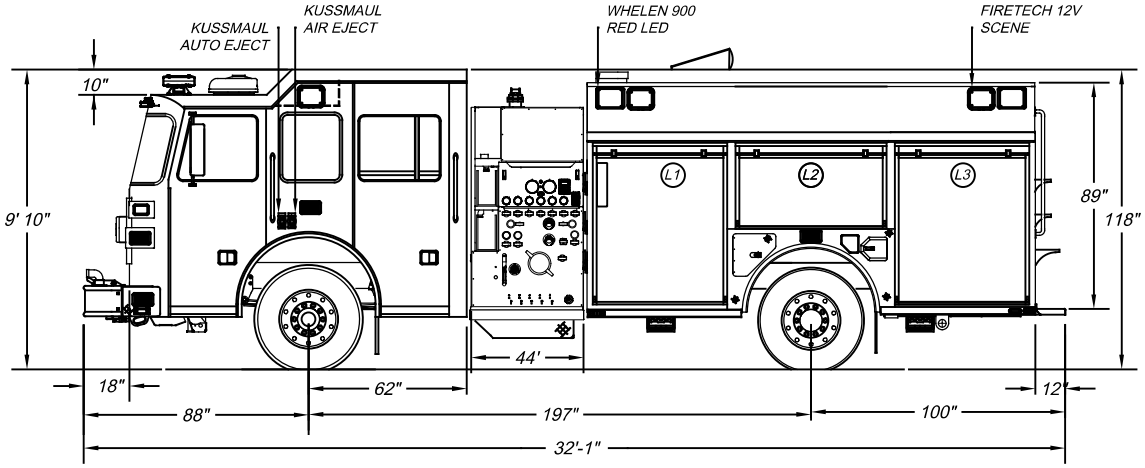

DIMENSIONS SHOWN ON THIS DRAWING ARE APPROXIMATE AND ARE SUBJECT TO MINOR DEVIATIONS DURING CONSTRUCTION.

IN THE EVENT OF A DISCREPANCY BETWEEN THE SUTPHEN SPECIFICATIONS AND DRAWING, THE SUTPHEN SPECIFICATIONS SHALL PREVAIL.

DRAWING IS FOR REFERENCE ONLY. SOME ITEMS PROPOSED MAY NOT BE SHOWN OR NOTED.

CUSTOMER APPROVAL

NAME: _____

TITLE: _____

DATE: _____

REV.	DESCRIPTION	BY	DATE
B	REFERENCE SHOP ORDER REVISION EMAIL	TF	08/16/24
A	REV-A SHOP ORDER	AG	4/22/24

THIS PRINT IS PROVIDED ON A RESTRICTED BASIS AND IS NOT TO BE USED IN ANY WAY DETRIMENTAL TO THE INTEREST OF SUTPHEN CORPORATION.

DRAWN BY: A.GONZALEZ

DATE: 1/30/23

MFG. FACILITY: URBANA PUMPER DIVISION

SUTPHEN

FORBES ROAD VFD

-

PROGRAM 1 CUSTOM PUMPER G9-XL

DWG. NO.: HS-7598