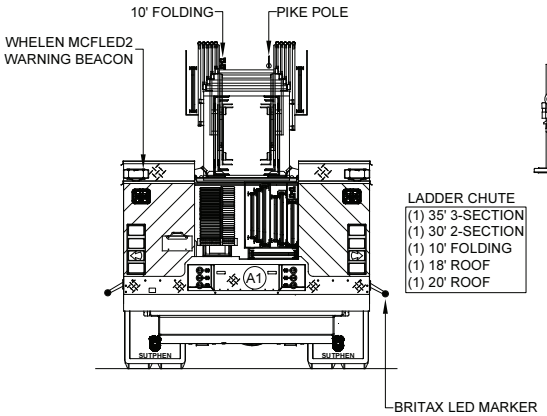

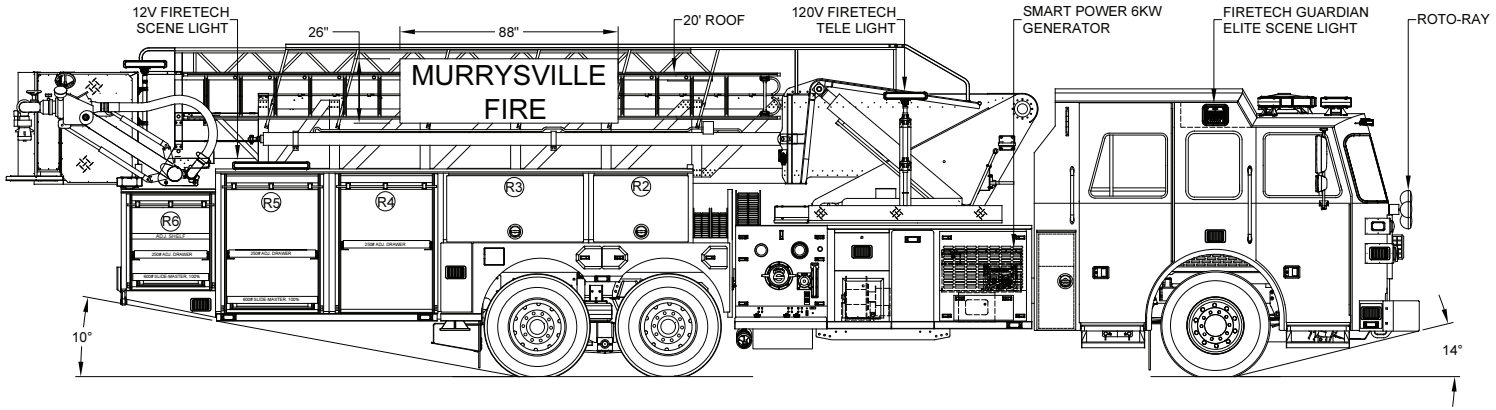

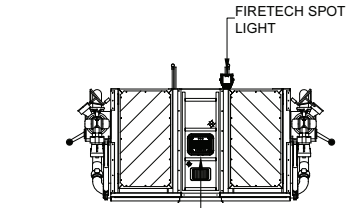

TWO-TONE CAB PAINT
PAINT BREAK OPTION #1
SILVER OVER LIME GREEN

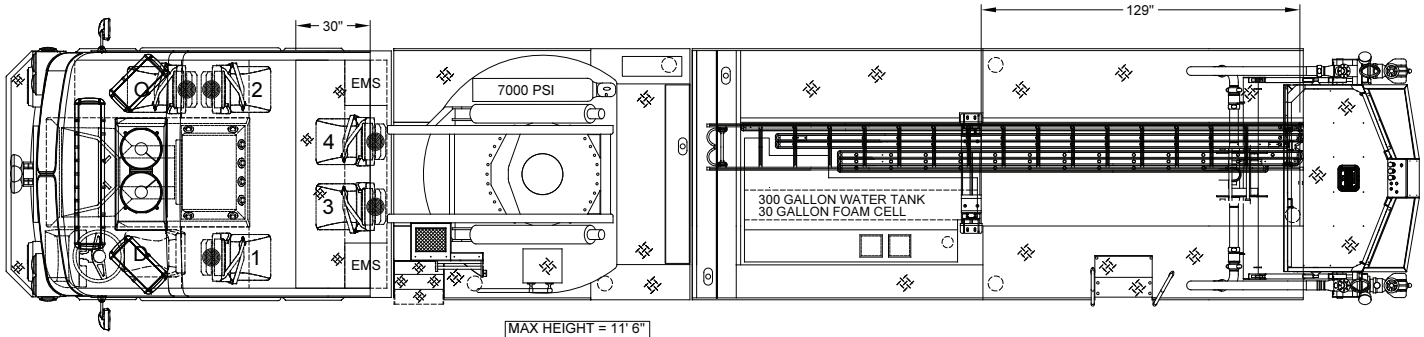

MAX HEIGHT = 11' 6"
MAX LENGTH = 47' 6"

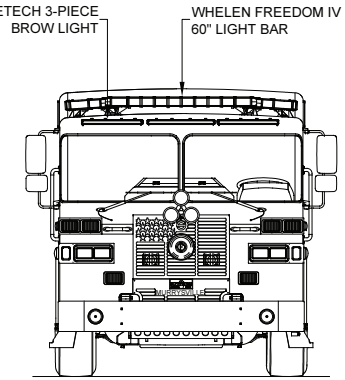

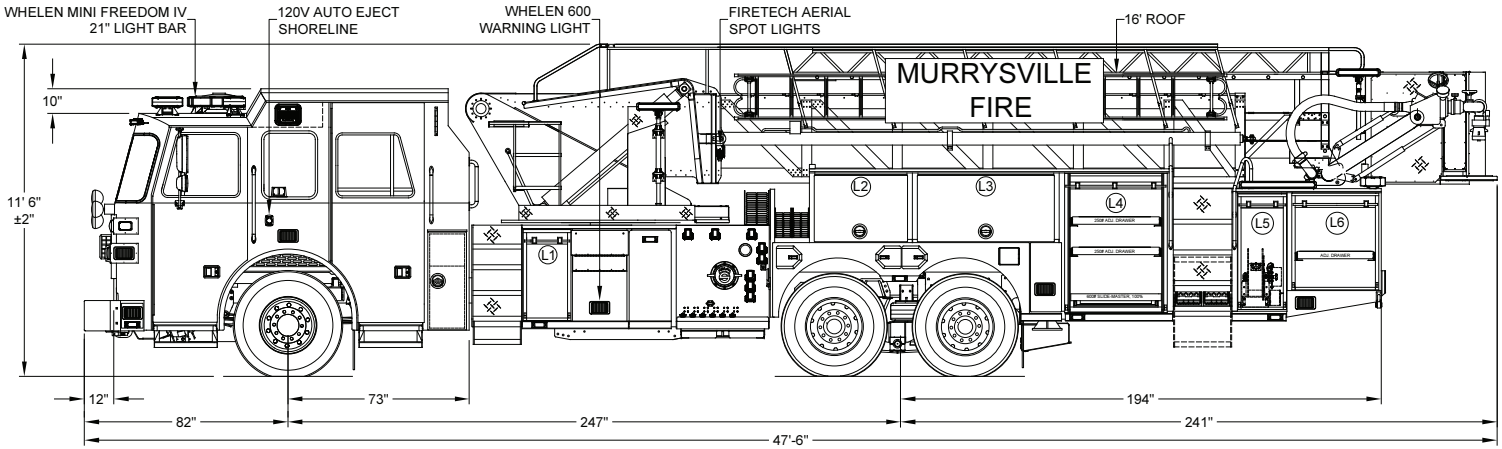

DOOR OPENINGS

COMPT.	HEIGHT	WIDTH
L1	31 13/16	13 7/16
L2	23	33 1/4
L3	23	50 1/4
L4	48 1/2	38 3/4
L5	40 1/2	15 1/8
L6	32 1/8	30 7/8

COMPARTMENT DIMENSIONS

HEIGHT	WIDTH	DEPTH
38 1/2	20 5/16	27 1/2
27 1/2	41 1/2	12 1/8
27 1/2	58	12 1/8
56 1/2	45 3/4	26 1/2
48 1/2	22	26 1/2
40 1/8	34 3/4	26 1/2

DOOR OPENINGS

COMPT.	HEIGHT	WIDTH
R1	31 13/16	33 7/16
R2	23	33 1/4
R3	23	50 1/4
R4	48 1/2	38 3/4
R5	48 1/2	38 3/4
R6	32 1/8	30 7/8

COMPARTMENT DIMENSIONS

HEIGHT	WIDTH	DEPTH
38 1/2	40	8 1/2 LOWER 10" 27 1/2 UPPER 28 1/2"
19 1/2	41 1/2	26 1/2
19 1/2	58	26 1/2
48 1/2	45 3/4	26 1/2
48 1/2	45 3/4	26 1/2
40 1/8	34 3/4	26 1/2

DOOR OPENINGS

COMPT.	HEIGHT	WIDTH
A1	9 1/8	24 1/2

COMPARTMENT DIMENSIONS

HEIGHT	WIDTH	DEPTH
9 7/8	26	88

TOTAL COMPARTMENT VOLUME - 260.30 CU.FT.

DIMENSIONS SHOWN ON THIS DRAWING ARE APPROXIMATE AND ARE SUBJECT TO MINOR DEVIATIONS DURING CONSTRUCTION.

IN THE EVENT OF A DISCREPANCY BETWEEN THE SUTPHEN SPECIFICATIONS AND DRAWING, THE SUTPHEN SPECIFICATIONS SHALL PREVAIL.

DRAWING IS FOR REFERENCE ONLY. SOME ITEMS PROPOSED MAY NOT BE SHOWN OR NOTED.

CUSTOMER APPROVAL

NAME: _____

TITLE: _____

DATE: _____

REV.	DESCRIPTION	BY	DATE
O	REV-O SHOP ORDER/REFERENCE SHOP ORDER CHANGE DOCUMENT ON SHARED DRIVE	JML	11/21/2022
N	REV-N SHOP ORDER/REFERENCE SHOP ORDER CHANGE DOCUMENT ON SHARED DRIVE	JML	10/31/2022
M	REV-M SHOP ORDER/REFERENCE SHOP ORDER CHANGE DOCUMENT ON SHARED DRIVE	JML	09/02/2022
L	REV-L SHOP ORDER/REFERENCE SHOP ORDER CHANGE DOCUMENT ON SHARED DRIVE	JML	07/15/2022

THIS PRINT IS PROVIDED ON A RESTRICTED BASIS AND IS NOT TO BE USED IN ANY WAY DETRIMENTAL TO THE INTEREST OF SUTPHEN CORPORATION.

DRAWN BY: J.LAMBERT

DATE: 03/08/2021

MFG. FACILITY: DUBLIN

SUTPHEN

MURRYSVILLE FIRE CO. NO. 1
MURRSVILLE, PA

SPH100 AERIAL PLATFORM

DWG. NO.: HS-7078