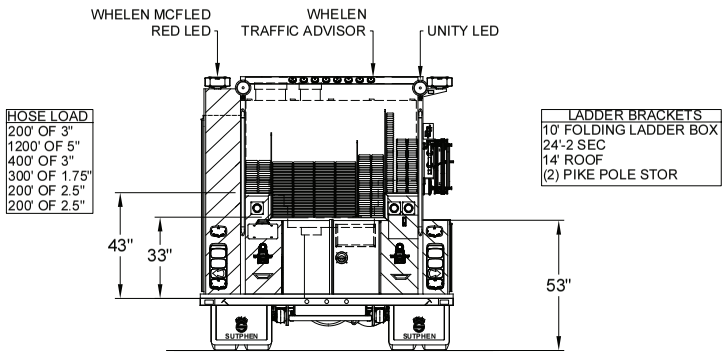

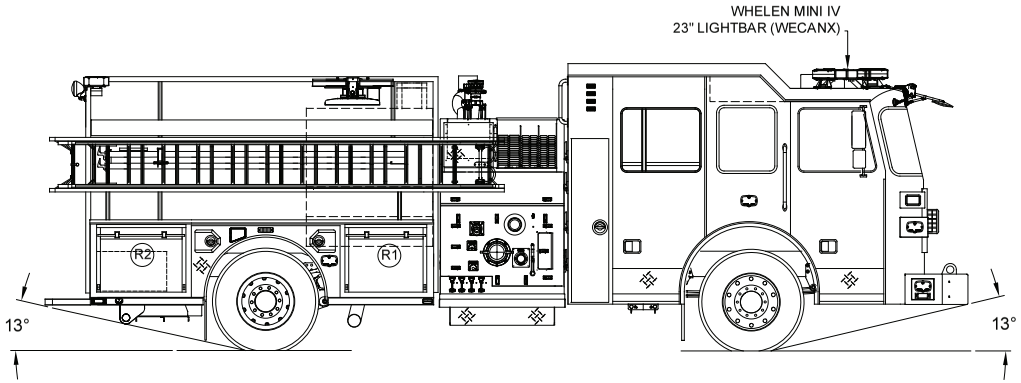

LEFT SIDE COMPARTMENTATION					
COMPT	DOORS	OPENING DIMENSIONS	INSIDE DIMENSIONS	VOLUME	
L1	ROLL-UP	30.5"w X 57.4"h	36.1"w X 68"h X 27.3"d	27.6 CU. FT.	(36"h X 13.5"d UPPER)
L2	ROLL-UP	57.5"w X 28.2"h	61.6"w X 36.8"h X 13.5"d	29.8 CU. FT.	
L3	ROLL-UP	30.5"w X 57.4"h	36.1"w X 68"h X 27.3"d	27.6 CU. FT.	(36"h X 13.5"d UPPER)
H1	LIFT UP	(2) 60"w X 12.5"d	135.5"w X 15"h X 13.5"d	15.9 CU. FT.	

RIGHT SIDE COMPARTMENTATION				
COMPT	DOORS	OPENING DIMENSIONS	INSIDE DIMENSIONS	VOLUME
R1	ROLL-UP	30.5"w X 22.4"h	36.1"w X 31"h X 27.3"d	17.7 CU. FT.
R2	ROLL-UP	30.5"w X 22.4"h	36.1"w X 31"h X 27.3"d	17.7 CU. FT.

REAR STEP COMPARTMENTS				
COMPT	DOORS	OPENING DIMENSIONS	INSIDE DIMENSIONS	VOLUME
A1	HINGED	33"w X 21"h	26"h X 37"w X 28"d	10.4 CU. FT.
			TOTAL:	146.7 CU.FT.

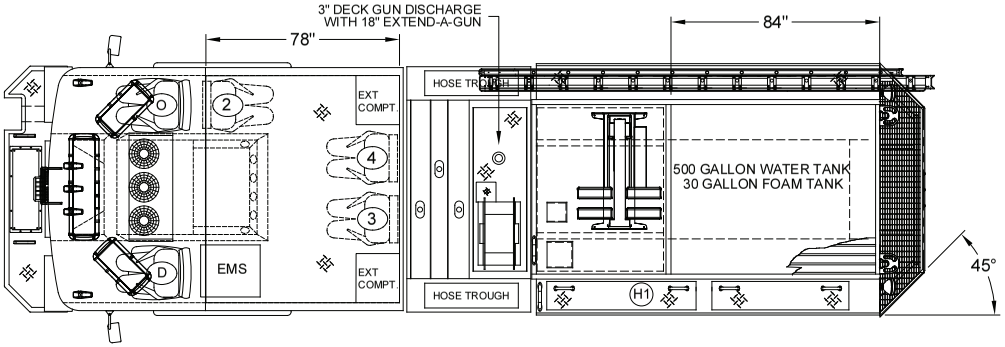

MAX HEIGHT
9'-8"

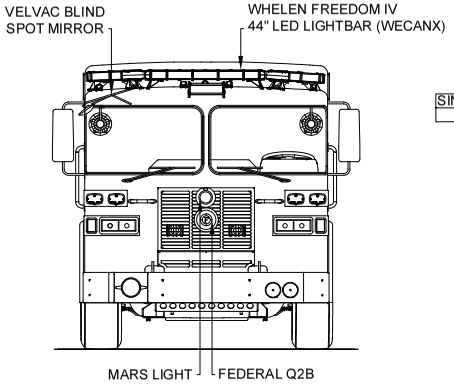

SINGLE TONE PAINT
RED

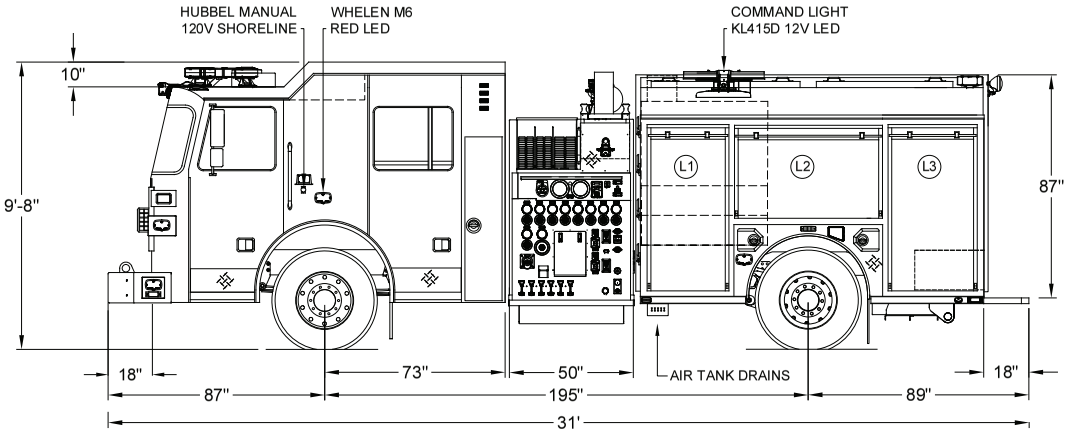

DIMENSIONS SHOWN ON THIS DRAWING ARE APPROXIMATE AND ARE SUBJECT TO MINOR DEVIATIONS DURING CONSTRUCTION.

IN THE EVENT OF A DISCREPANCY BETWEEN THE SUTPHEN SPECIFICATIONS AND DRAWING, THE SUTPHEN SPECIFICATIONS SHALL PREVAIL.

DRAWING IS FOR REFERENCE ONLY. SOME ITEMS PROPOSED MAY NOT BE SHOWN OR NOTED.

CUSTOMER APPROVAL

NAME: _____

TITLE: _____

DATE: _____

REV.	DESCRIPTION	BY	DATE
L	REFERENCE SHOP ORDER CHANGE DOCUMENT ON SHARED DRIVE	TF	09/09/2021
K	UPDATED NOTES IN REGARDS TO FRONT SUCTION DRAIN RELOCATION	TF	08/05/2021
J	FENDERETTES CHANGED FROM CHROME RUBBER TO BLACK	TF	04/30/2021
I	FENDERETTES CHANGED FROM BLACK RUBBER TO CHROME	TF	04/29/2021

DRAWN BY: T.FAHOUM

DATE: 06/11/2020

MFG. FACILITY: DUBLIN

SUTPHEN

DEKALB COUNTY FIRE RESCUE
STONE MOUNTAIN, GA

CUSTOM PUMPER

DWG. NO.: HS-6831-36