COMPT	DOORS	OPENING DIMENSIONS	INSIDE DIMENSIONS	VOLUME
L1	ROLL-UP	16.25"W x 30"H	23.25"W x 38.25"H x 26.50"D	13.64 CU. FT.
L2	HINGED	36.00"W x 24.25"H	41.25"W x 29.25"H x 12"D	8.37 CU. FT.
L3	HINGED	52.50"W x 24.25"H	57.75"W x 29.25"H x 12"D	11.73 CU. FT.
L4	ROLL-UP	30.75"W x 49"H	37.75"W x 52.50"H x 26.50"D	30.39 CU. FT.
L5	ROLL-UP	38.50"W x 49"H	45.50"W x 52.50"H X 26.50"D	36.63 CU. FT.
L6	ROLL-UP	18.25"W x 44"H	22.50"W x 42.25"H X 26.50"D	14.58 CU. FT.

COMPT	DOORS	OPENING DIMENSIONS	INSIDE DIMENSIONS	VOLUME
R1	PANEL	38"W x 30"H	45.25"W x 29.25"H x 18.25"D	13.97 CU. FT.
R2	HINGED	36.00"W x 25"H	41.25"W x 29.25"H x 26.50"D	18.50 CU. FT.
R3	HINGED	52.50"W x 25"H	58"W x 29.25"H x 26.50"D	26.00 CU. FT.
R4	ROLL-UP	30.75"W x 49"H	37.75"W x 52.50"H x 26.50"D	30.39 CU. FT.
R5	ROLL-UP	38.50"W x 49"H	45.50"W x 52.50"H X 26.50"D	36.63 CU. FT.
R6	ROLL-UP	18.25"W x 44"H	22.50"W x 42.25"H X 26.50"D	14.58 CU. FT.
A1	HINGED	25"W x 9.50"H	25"W x 9.50"H X 88" D	12.09 CU. FT.
			TOTAL VOLUME	267.50 CU. FT.

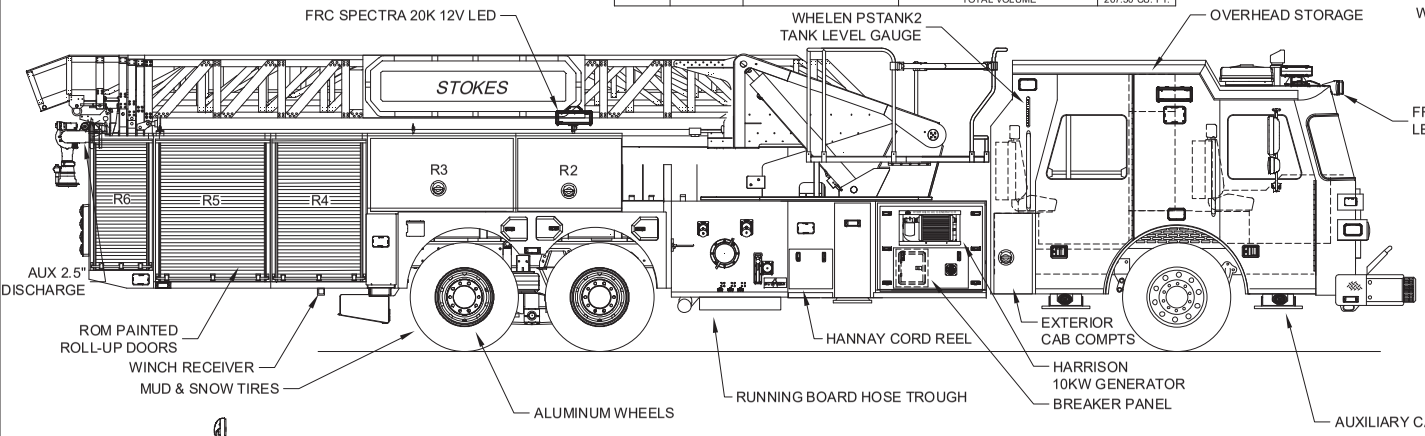

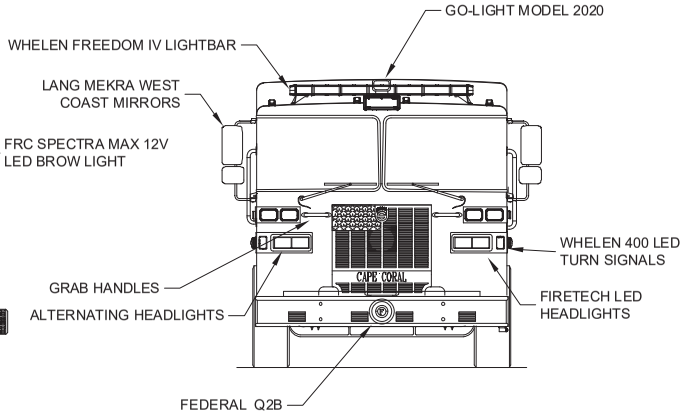

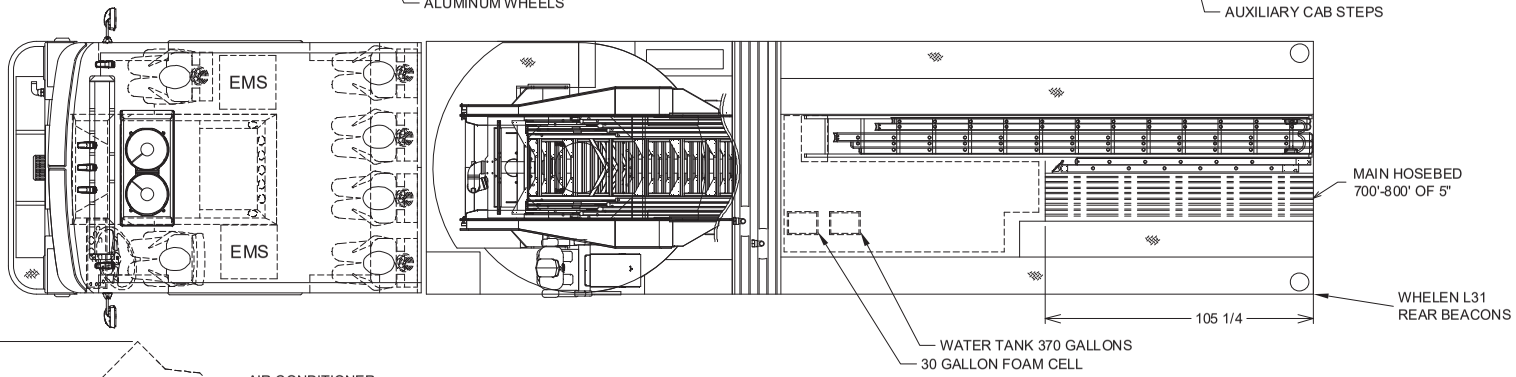

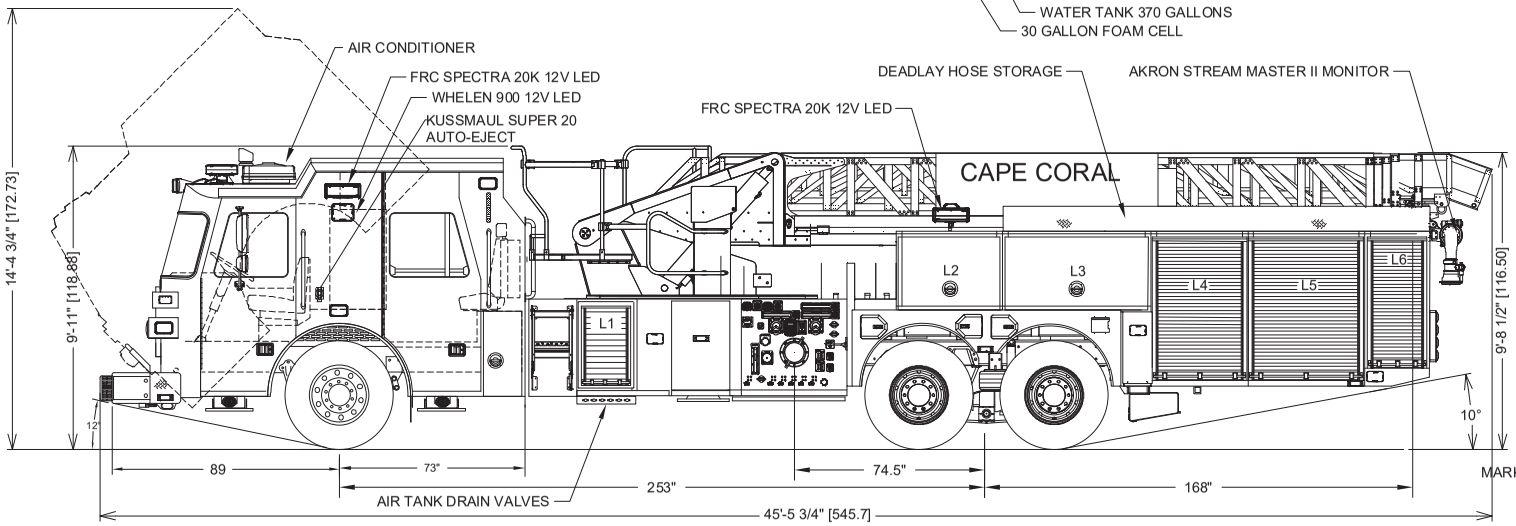

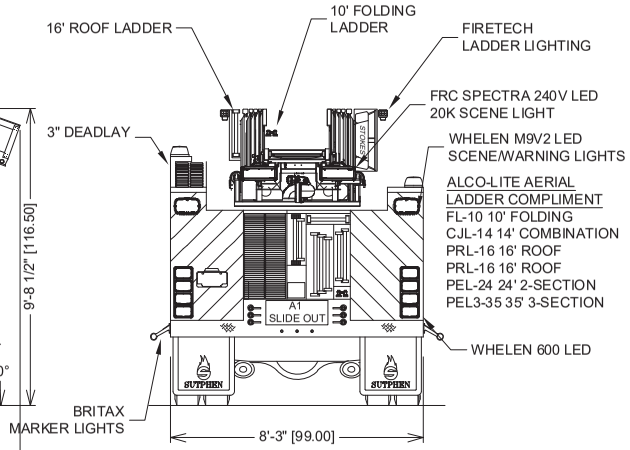

DIMENSIONS SHOWN ON THIS DRAWING ARE APPROXIMATE AND ARE SUBJECT TO MINOR DEVIATIONS DURING CONSTRUCTION.

IN THE EVENT OF A DISCREPANCY BETWEEN THE SUTPHEN SPECIFICATIONS AND DRAWING, THE SUTPHEN SPECIFICATIONS SHALL PREVAIL.

DRAWING IS FOR REFERENCE ONLY. SOME ITEMS PROPOSED MAY NOT BE SHOWN OR NOTED.

CUSTOMER APPROVAL

NAME:

TITLE:

DATE:

REV.	DESCRIPTION	BY	DATE
A.0	REVISION FOLLOWING PRE-CONSTRUCTION MEETING	CAM	12/20/2019

THIS PRINT IS PROVIDED ON A RESTRICTED BASIS AND IS NOT TO BE USED IN ANY WAY DETRIMENTAL TO THE INTEREST OF SUTPHEN CORPORATION.

DRAWN BY: CAM

DATE: 06/28/2019

MFG. FACILITY: HILLIARD

SUTPHEN

CAPE CORAL FIRE DEPARTMENT
CAPE CORAL, FL

SL100

DWG. NO.: HS-6711