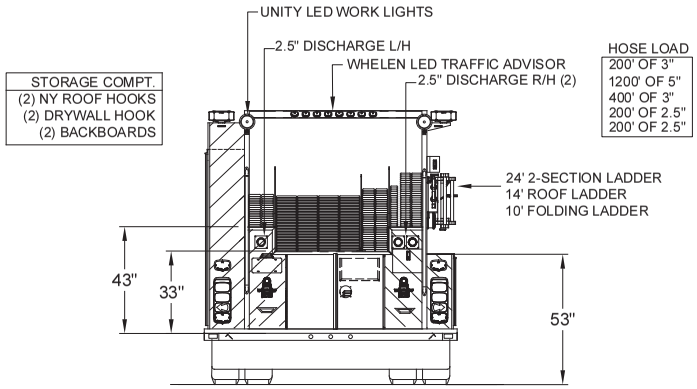

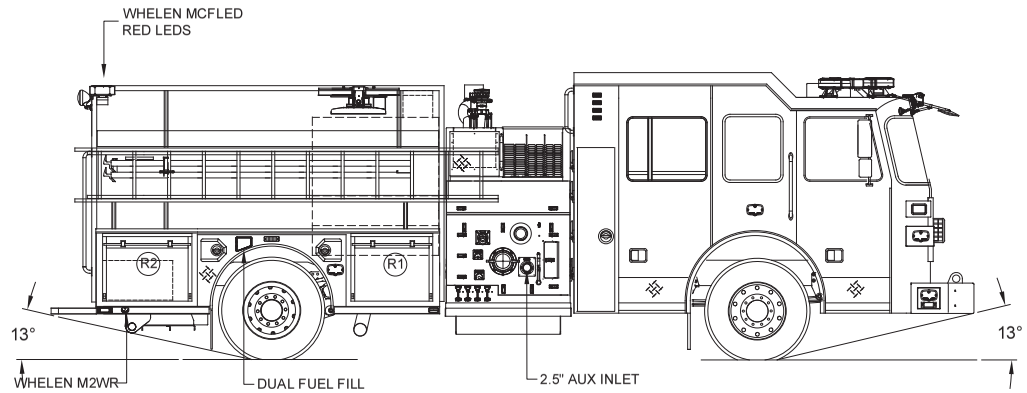

LEFT SIDE COMPARTMENTATION					
COMPT	DOORS	OPENING DIMENSIONS	INSIDE DIMENSIONS	VOLUME	
L1	ROLL-UP	30.5"w X 57.4"h	36.1"w X 68"h X 27.3"d	27.6 CU. FT.	(36"h X 13.5"d UPPER)
L2	ROLL-UP	57.5"w X 28.2"h	61.6"w X 36.8"h X 13.5"d	29.8 CU. FT.	
L3	ROLL-UP	30.5"w X 57.4"h	36.1"w X 68"h X 27.3"d	27.6 CU. FT.	(36"h X 13.5"d UPPER)
H1	LIFT UP	(2) 60"w X 12.5"d	135.5"w X 15"h X 13.5"d	15.9 CU. FT.	

RIGHT SIDE COMPARTMENTATION				
COMPT	DOORS	OPENING DIMENSIONS	INSIDE DIMENSIONS	VOLUME
R1	ROLL-UP	30.5"w X 22.4"h	36.1"w X 31"h X 27.3"d	17.7 CU. FT.
R2	ROLL-UP	30.5"w X 22.4"h	36.1"w X 31"h X 27.3"d	17.7 CU. FT.

REAR STEP COMPARTMENTS				
COMPT	DOORS	OPENING DIMENSIONS	INSIDE DIMENSIONS	VOLUME
A1	HINGED	33"w X 21"h	26"h X 37"w X 28"d	10.4 CU. FT.
			TOTAL:	146.7 CU.FT.

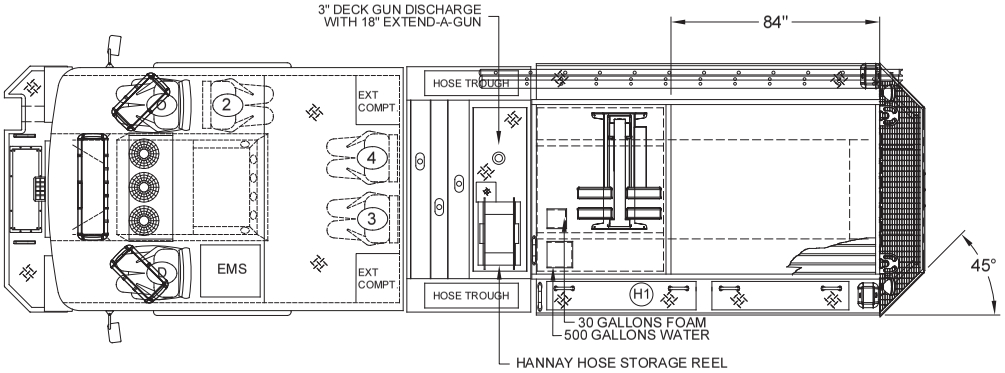

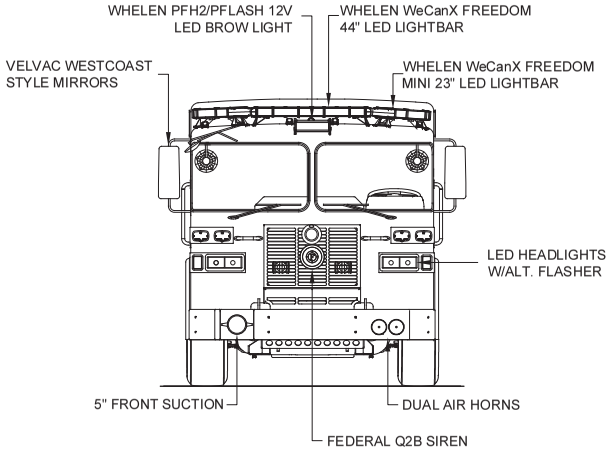

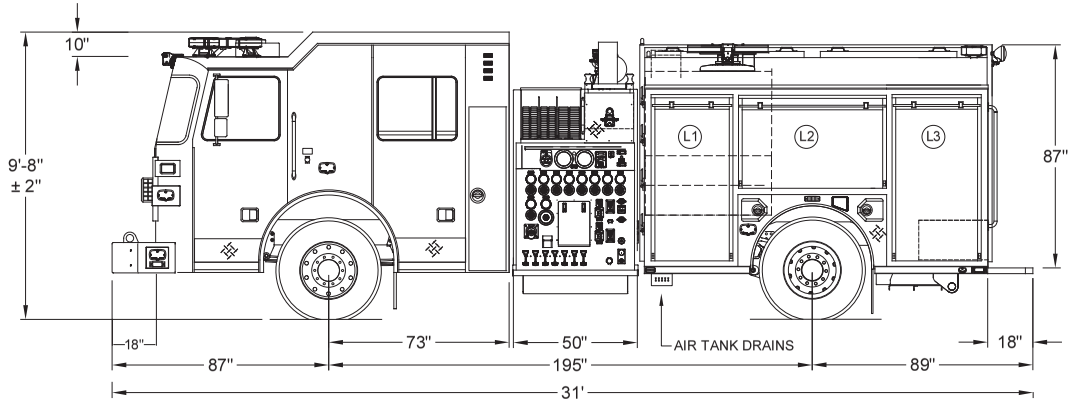

DIMENSIONS SHOWN ON THIS DRAWING ARE APPROXIMATE AND ARE SUBJECT TO MINOR DEVIATIONS DURING CONSTRUCTION.

IN THE EVENT OF A DISCREPANCY BETWEEN THE SUTPHEN SPECIFICATIONS AND DRAWING, THE SUTPHEN SPECIFICATIONS SHALL PREVAIL.

DRAWING IS FOR REFERENCE ONLY. SOME ITEMS PROPOSED MAY NOT BE SHOWN OR NOTED.

CUSTOMER APPROVAL

NAME:

TITLE:

DATE:

REV.	DESCRIPTION	BY	DATE
F	COMPONENT REPORT UPDATED	MJC	10/28/20
E	COMPONENT REPORT UPDATED	MJC	07/28/20
D	COMPONENT REPORT UPDATED / DRAWING UPDATED DESCRIPTION ON WHELEN LIGHTBARS	MJC	06/02/20
C	COMPONENT REPORT UPDATED / PUMP MODULE MODIFIED	MJC	03/26/20

THIS PRINT IS PROVIDED ON A RESTRICTED BASIS AND IS NOT TO BE USED IN ANY WAY DETRIMENTAL TO THE INTEREST OF SUTPHEN CORPORATION.

DRAWN BY: M.CLARK

DATE: 11/06/19

MFG. FACILITY: DUBLIN

SUTPHEN

DEKALB COUNTY FIRE RESCUE
STONE MOUNTAIN, GA

CUSTOM PUMPER

DWG. NO.: HS-6638-40