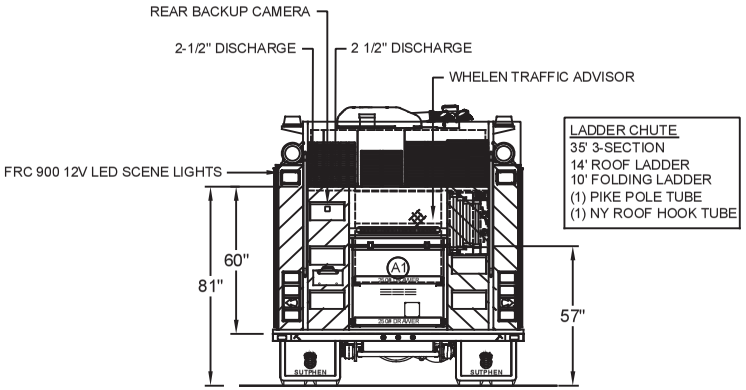

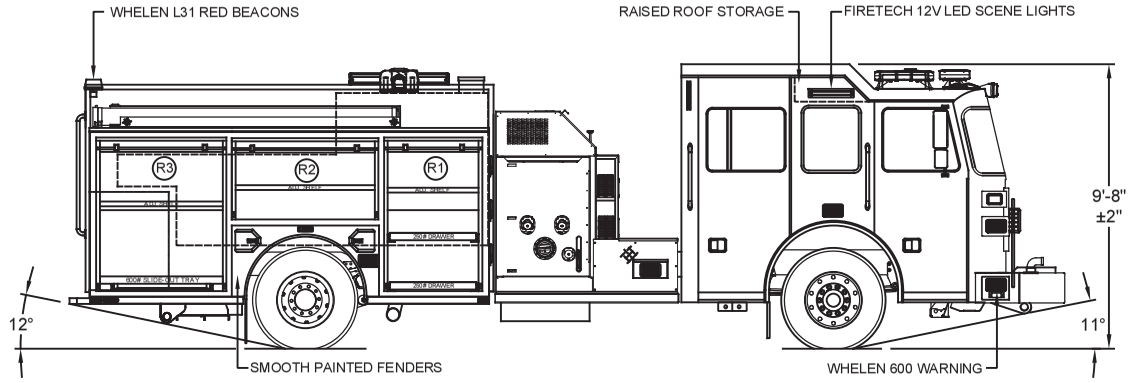

LEFT SIDE COMPARTMENTS				
COMPT	DOORS	OPENING DIMENSIONS	INSIDE DIMENSIONS	VOLUME
L1	ROLL-UP	34.5"w X 56.875"h	43.125"w X 66"h X 27.375"d	40.8 CU. FT.
L2	ROLL-UP	59.5"w X 26.25"h	62"w X 35.375"h X 27.375"d	28.6 CU. FT.
L3	ROLL-UP	47.875"w X 56.875"h	53.375"w X 66"h X 27.375"d	50.6 CU. FT.

RIGHT SIDE COMPARTMENTS				
COMPT	DOORS	OPENING DIMENSIONS	INSIDE DIMENSIONS	VOLUME
R1	ROLL-UP	34.5"w X 56.875"h	43.125"w X 66"h X 27.375"d (10.5"d upper)	31.1CU. FT.
R2	ROLL-UP	59.5"w X 26.25"h	62"w X 35.375"h X 10.5"d	13.3 CU. FT.
R3	ROLL-UP	47.875"w X 56.875"h	53.375"w X 66"h X 27.375"d (10.5"d upper)	38.5 CU. FT.

REAR STEP COMPARTMENT				
COMPT	DOORS	OPENING DIMENSIONS	INSIDE DIMENSIONS	VOLUME
A1	ROLL-UP	37.875"w X 30.6875"h	40.375"w X 40"h x 27.1875"d	25.4 CU. FT.
				TOTAL: 228.3 CU.FT.

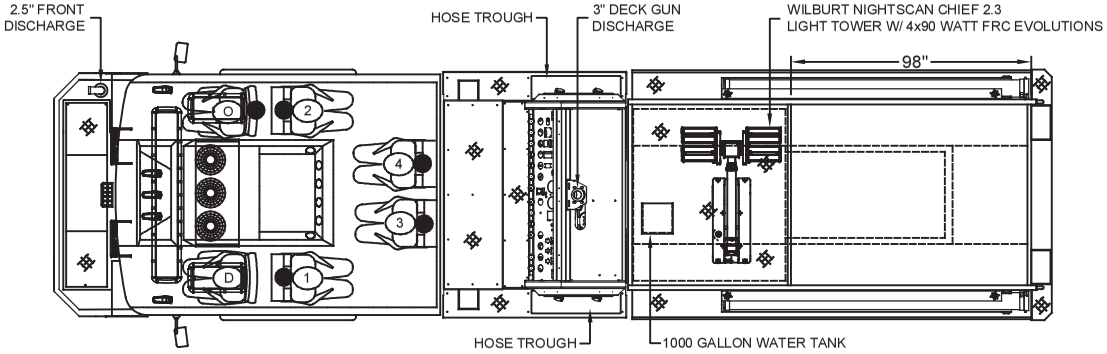

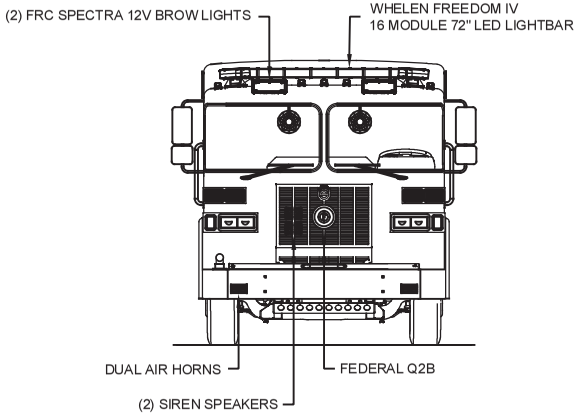

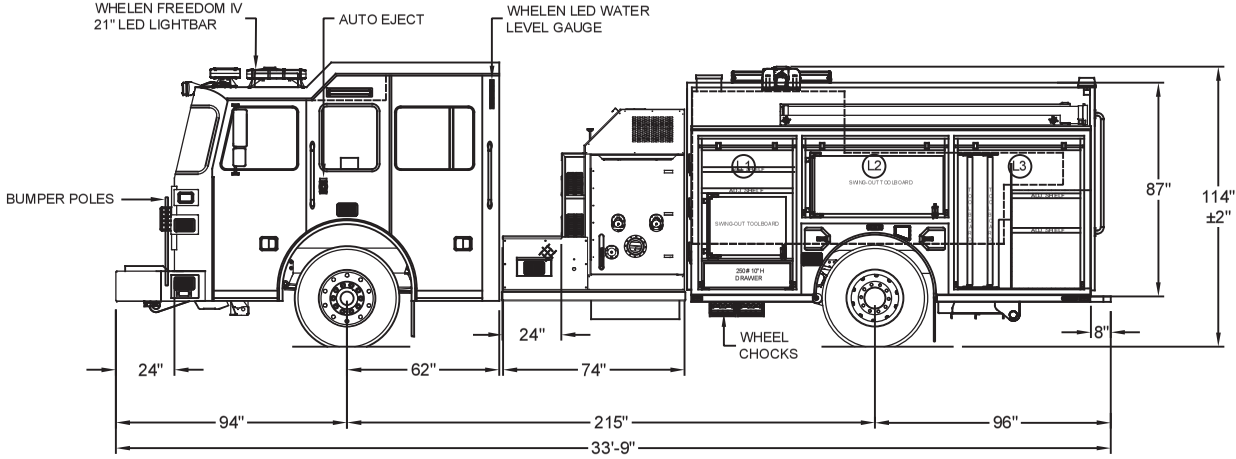

DIMENSIONS SHOWN ON THIS DRAWING ARE APPROXIMATE AND ARE SUBJECT TO MINOR DEVIATIONS DURING CONSTRUCTION.

IN THE EVENT OF A DISCREPANCY BETWEEN THE SUTPHEN SPECIFICATIONS AND DRAWING, THE SUTPHEN SPECIFICATIONS SHALL PREVAIL.

DRAWING IS FOR REFERENCE ONLY. SOME ITEMS PROPOSED MAY NOT BE SHOWN OR NOTED.

CUSTOMER APPROVAL

NAME:

TITLE:

DATE:

REV.	DESCRIPTION	BY	DATE
B	WARNING LIGHT CALL-OUTS	JM	08/31/18
A	REV-A SHOP ORDER	JM	03/29/18

DRAWN BY: J.MORGAN

DATE: 02/02/18

MFG. FACILITY: DUBLIN

SUTPHEN

BELINGTON VOLUNTEER FIRE DEPARTMENT
BELINGTON, WV

CUSTOM PUMPER - S2 BODY

DWG. NO.: HS-6213