COMPT	DOORS	OPENING DIMENSIONS	INSIDE DIMENSIONS	VOLUME
L1 UPPER	ROLL-UP	23.25"W x 21.00"H	29.75"W x 29.75"H x 10.00"D	5.12 CU. FT.
L1 LOWER	ROLL-UP	23.25"W x 29.50"H	29.75"W x 29.75"H x 23.75"D	12.16 CU. FT.
L2	ROLL-UP	53.25"W x 21.00"H	60.00"W x 29.75"H x 10.00"D	10.32 CU. FT.
L3 UPPER	ROLL-UP	23.25"W x 21.00"H	49.75"W x 29.75"H x 10.00"D	8.56 CU. FT.
L3 LOWER	ROLL-UP	23.25"W x 29.50"H	49.75"W x 29.75"H x 23.75"D	20.34 CU. FT.
L4 UPPER	ROLL-UP	23.25"W x 21.00"H	22.25"W x 29.75"H x 10.00"D	3.83 CU. FT.
L4 LOWER	ROLL-UP	23.25"W x 29.50"H	22.25"W x 29.75"H x 23.75"D	9.09 CU. FT.
A1	ROLL-UP	37.50"W x 28.50"H	46.00"W x 37.75"H x 30.00"D	30.14 CU. FT.

COMPT	DOORS	OPENING DIMENSIONS	INSIDE DIMENSIONS	VOLUME
R1 UPPER	ROLL-UP	23.25"W x 21.00"H	29.75"W x 29.75"H x 10.00"D	5.12 CU. FT.
R1 LOWER	HINGED	23.25"W x 29.50"H	29.75"W x 29.75"H x 23.75"D	12.16 CU. FT.
R2	ROLL-UP	53.25"W x 21.00"H	60.00"W x 29.75"H x 10.00"D	10.32 CU. FT.
R3 UPPER	ROLL-UP	23.25"W x 21.00"H	49.75"W x 29.75"H x 10.00"D	8.56 CU. FT.
R3 LOWER	ROLL-UP	23.25"W x 29.50"H	49.75"W x 29.75"H x 23.75"D	20.34 CU. FT.
R4 UPPER	HINGED	23.25"W x 21.00"H	22.25"W x 29.75"H x 10.00"D	3.83 CU. FT.
R4 LOWER	ROLL-UP	23.25"W x 29.50"H	22.25"W x 29.75"H x 23.75"D	9.09 CU. FT.
			TOTAL VOLUME	168.73 CU. FT.

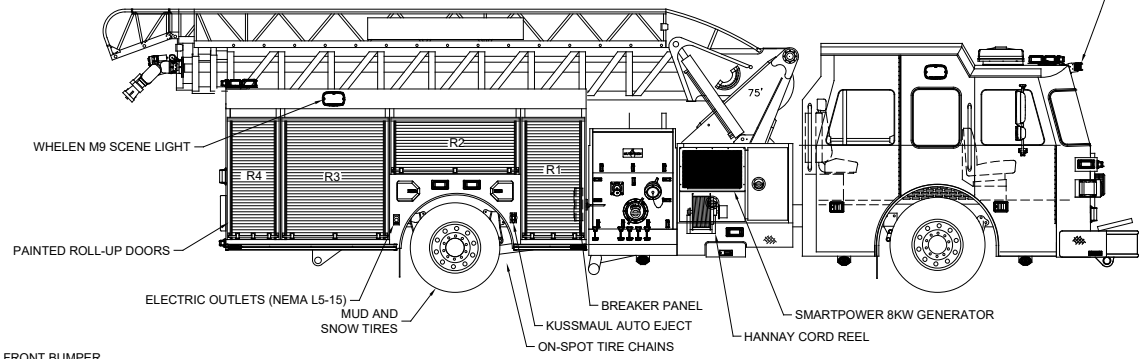

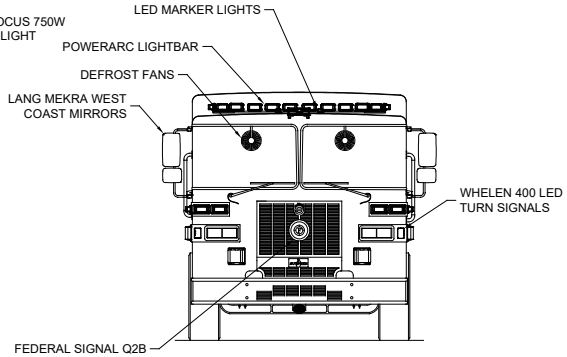

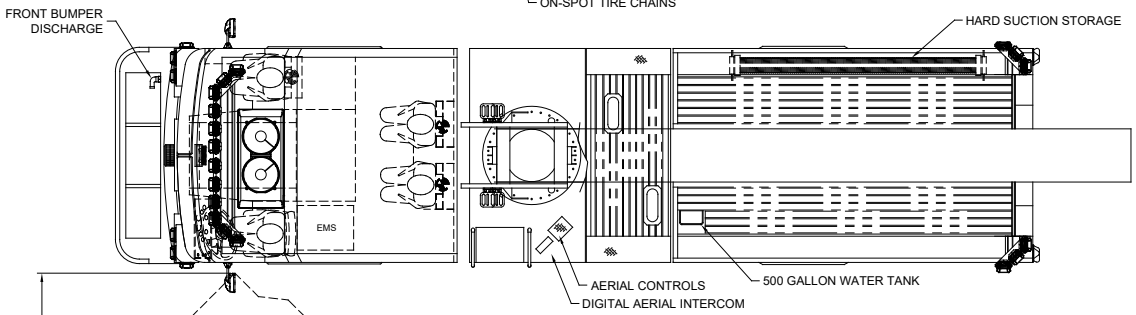

800' OF 4" EACH SIDE OF HOSE BED
600' OF 2 1/2" DRIVER'S SIDE OF HOSE BED, SINGLE STACK
200' OF 1 1/2" MIDDLE CROSSLAY
200' OF 1 3/4" REAR CROSSLAY
200' OF 2 1/2" FRONT CROSSLAY
500 GALLON TANK
PUMPER GROUND LADDERS

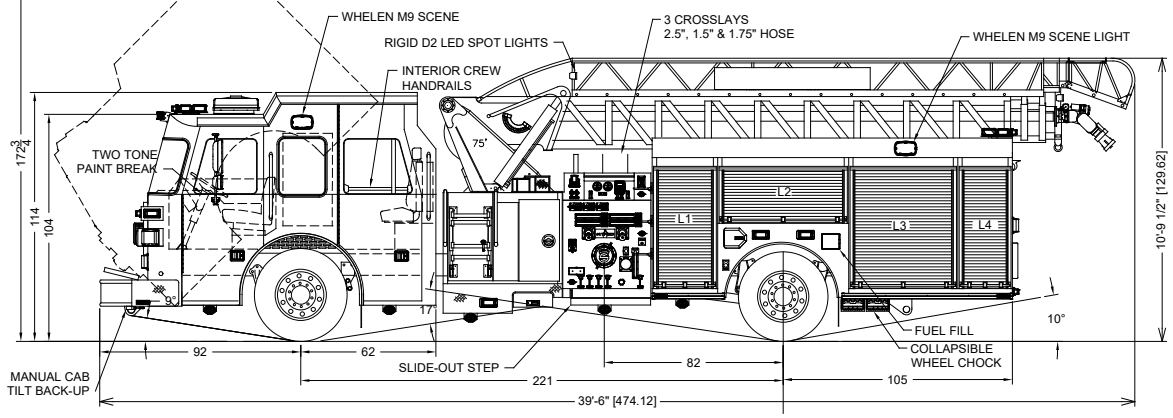

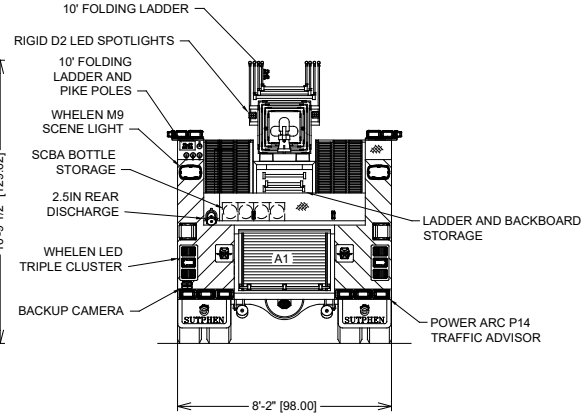

DIMENSIONS SHOWN ON THIS DRAWING ARE APPROXIMATE AND ARE SUBJECT TO MINOR DEVIATIONS DURING CONSTRUCTION.

IN THE EVENT OF A DISCREPANCY BETWEEN THE SUTPHEN SPECIFICATIONS AND DRAWING, THE SUTPHEN SPECIFICATIONS SHALL PREVAIL.

DRAWING IS FOR REFERENCE ONLY. SOME ITEMS PROPOSED MAY NOT BE SHOWN OR NOTED.

CUSTOMER APPROVAL

NAME:

TITLE:

DATE:

REV.	DESCRIPTION	BY	DATE
-	-	-	-

THIS PRINT IS PROVIDED ON A RESTRICTED BASIS AND IS NOT TO BE USED IN ANY WAY DETRIMENTAL TO THE INTEREST OF SUTPHEN CORPORATION.

DRAWN BY: APF

DATE: 11/5/2019

MFG. FACILITY: HILLIARD

SUTPHEN

COLUMBIA FIRE DEPT.
COLUMBIA, MO

SLA75 REHARVEST

DWG. NO.: HS-6703