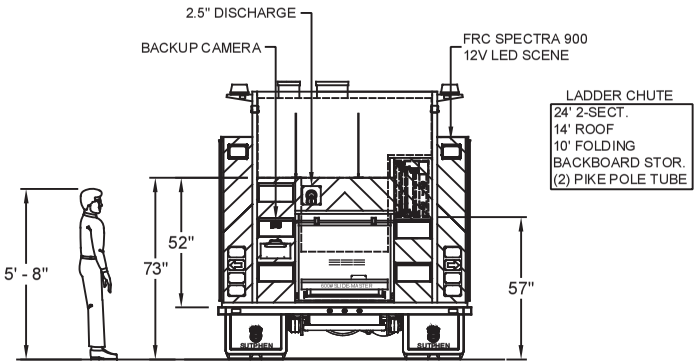

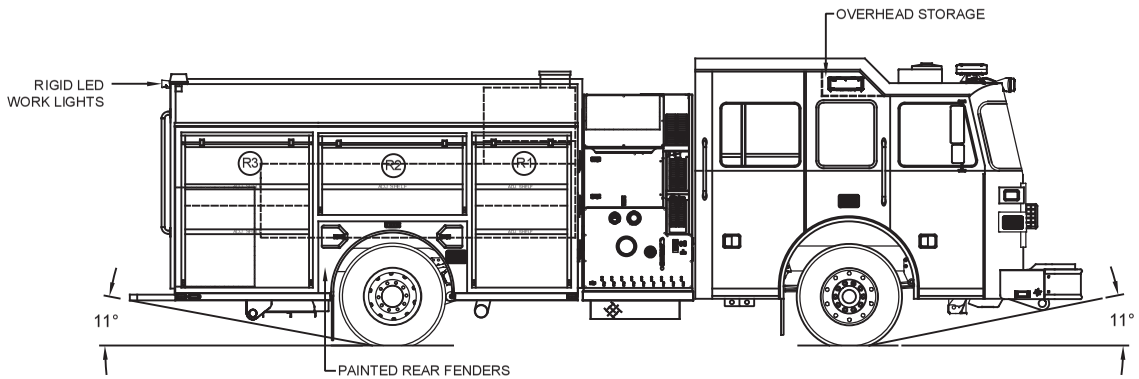

EXACT COMPARTMENT DIMENSIONS TBD PER ENGINEERING FOR LOW HOSEBED MODIFICATIONS

LEFT SIDE COMPARTMENTATION				
COMPT	DOORS	OPENING DIMENSIONS	INSIDE DIMENSIONS	VOLUME
L1	ROLL-UP	37"w X 56 7/8"h	43"w X 66"h X 27 1/4"d	40 CU. FT.
L2	ROLL-UP	57"w X 27 5/8"h	61 1/2"w X 36 1/2"h X 27 1/4"d	30 CU. FT.
L3	ROLL-UP	50"w X 56 7/8"h	53"w X 66"h X 27 1/4"d	52 CU. FT.

RIGHT SIDE COMPARTMENTATION				
COMPT	DOORS	OPENING DIMENSIONS	INSIDE DIMENSIONS	VOLUME
R1	ROLL-UP	37"w X 56 7/8"h	43"w X 66"h X 27 1/4"d (10 1/2"d upper)	26 CU. FT.
R2	ROLL-UP	57"w X 27 5/8"h	61 1/2"w X 36 1/2"h X 10 1/2"d	13 CU. FT.
R3	ROLL-UP	50"w X 56 7/8"h	53"w X 66"h X 27 1/4"d (10 1/2"d upper)	34 CU. FT.

REAR STEP COMPARTMENTS				
COMPT	DOORS	OPENING DIMENSIONS	INSIDE DIMENSIONS	VOLUME
A1	ROLL-UP	37 1/2"w X 31"h	40"h X 40"w X 29 1/2"d	27 CU. FT.

TOTAL: 222 CU.FT.

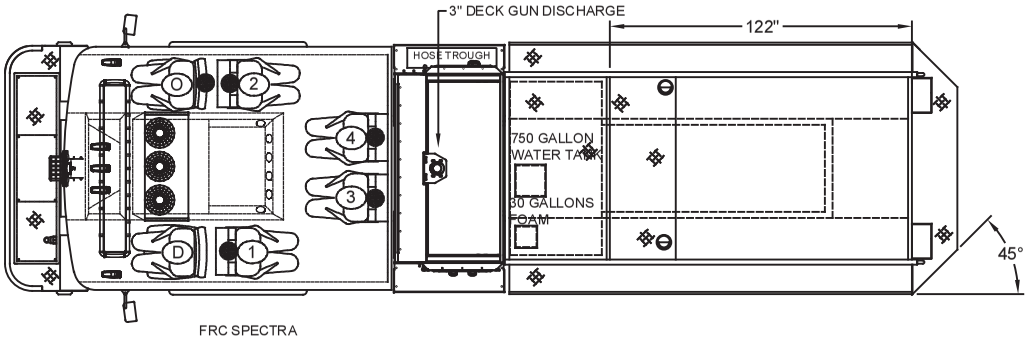

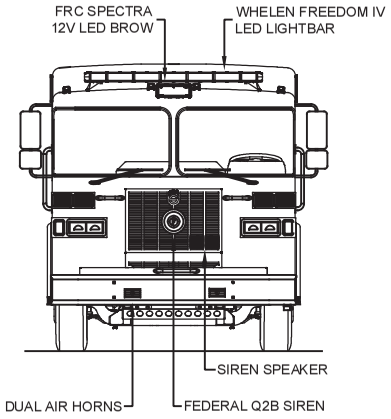

TWO-TONE CAB PAINT
PAINT BREAK OPTION #1
BLACK OVER CRIMSON

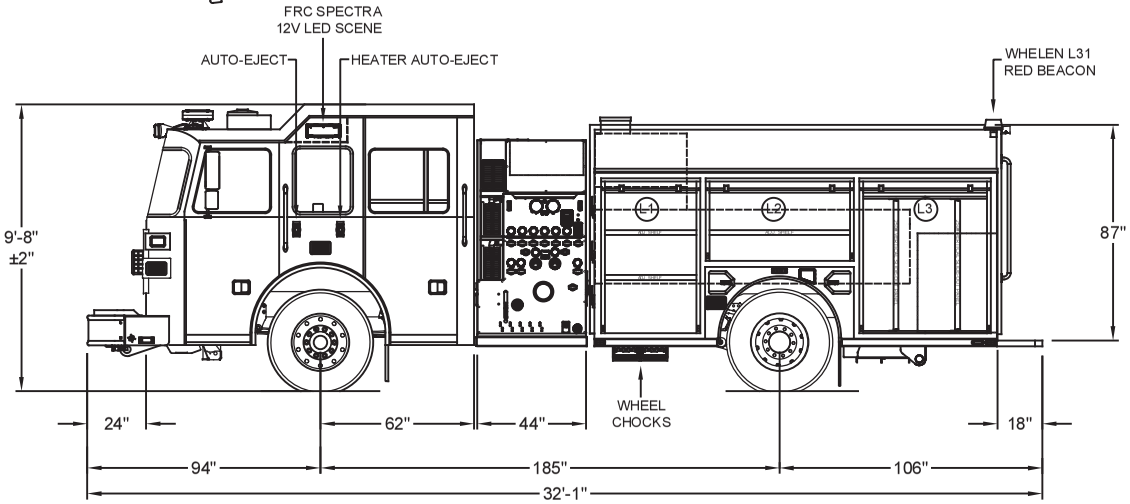

DIMENSIONS SHOWN ON THIS DRAWING ARE APPROXIMATE AND ARE SUBJECT TO MINOR DEVIATIONS DURING CONSTRUCTION.

IN THE EVENT OF A DISCREPANCY BETWEEN THE SUTPHEN SPECIFICATIONS AND DRAWING, THE SUTPHEN SPECIFICATIONS SHALL PREVAIL.

DRAWING IS FOR REFERENCE ONLY. SOME ITEMS PROPOSED MAY NOT BE SHOWN OR NOTED.

CUSTOMER APPROVAL

NAME: _____

TITLE: _____

DATE: _____

REV.	DESCRIPTION	BY	DATE
D	REV-D.SHOP.ORDER	KG	05/16/19
C	REV-C.SHOP.ORDER	KG	03/04/19
B	REV-B.SHOP.ORDER	KG	03/01/19
A	REV-A.SHOP.ORDER	JM	09/20/18

DRAWN BY: J.MORGAN

DATE: 09/07/18

MFG. FACILITY: DUBLIN

SUTPHEN

HS-6349 DEMO 457 (NORTHEAST DEMO)
DUBLIN, OHIO

CUSTOM PUMPER - S2 BODY

DWG. NO.: HS-6349