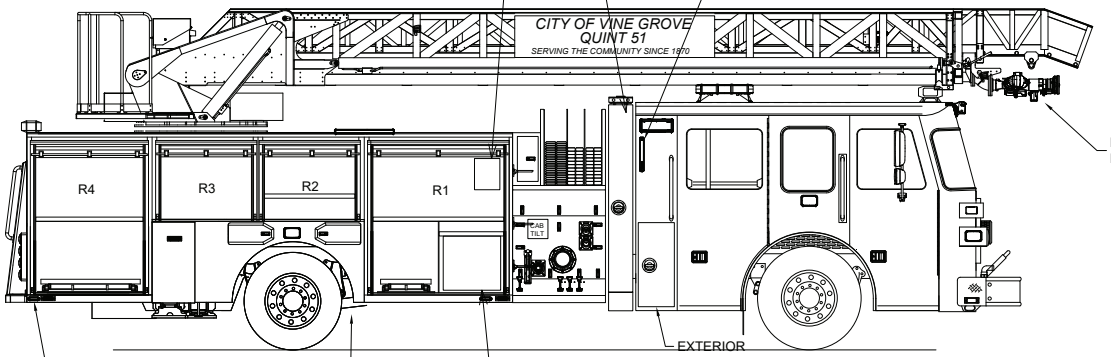

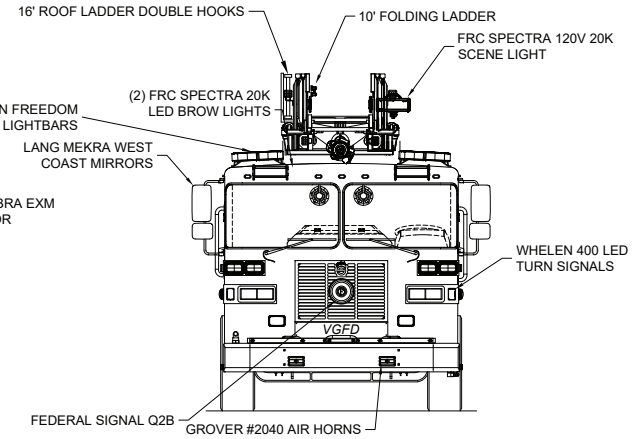

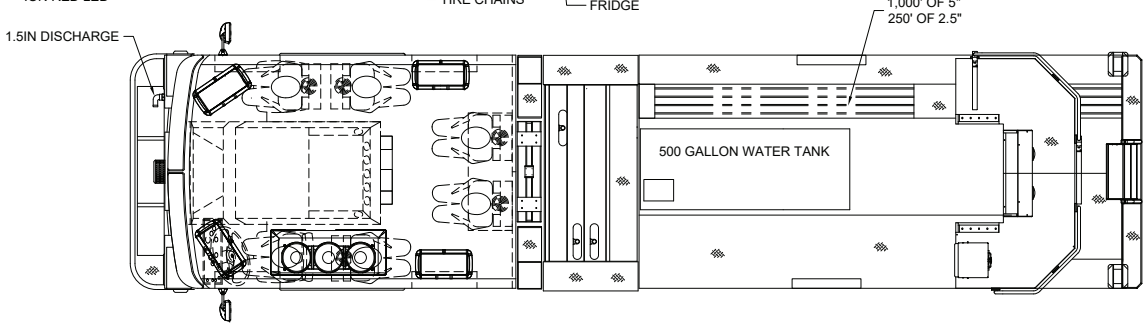

COMPT	DOORS	OPENING DIMENSIONS	INSIDE DIMENSIONS	VOLUME
L1 UPPER	ROLL-UP	55.50"W x 28.00"H	62.12"W x 37.13"H x 10.00"D	13.34 CU. FT.
L1 LOWER	ROLL-UP	55.50"W x 30.00"H	62.12"W x 30.00"H x 23.93"D	25.80 CU. FT.
L2	ROLL-UP	38.00"W x 27.13"H	44.50"W x 36.25"H x 10.00"D	9.33 CU. FT.
L3	ROLL-UP	38.00"W x 27.13"H	44.50"W x 36.25"H x 10.00"D	9.33 CU. FT.
L4 UPPER	ROLL-UP	46.00"W x 28.00"H	50.06"W x 37.13"H x 10.00"D	10.75 CU. FT.
L4 LOWER	ROLL-UP	46.00"W x 30.00"H	50.06"W x 30.00"H x 23.93"D	20.80 CU. FT.
R1 UPPER	ROLL-UP	55.50"W x 28.00"H	62.12"W x 37.13"H x 10.00"D	13.34 CU. FT.
R1 LOWER	ROLL-UP	55.50"W x 30.00"H	62.12"W x 30.00"H x 23.93"D	25.80 CU. FT.
R2	ROLL-UP	38.00"W x 27.13"H	44.50"W x 36.25"H x 10.00"D	9.33 CU. FT.
R3	ROLL-UP	38.00"W x 27.13"H	44.50"W x 36.25"H x 10.00"D	9.33 CU. FT.
R4 UPPER	ROLL-UP	46.00"W x 28.00"H	50.06"W x 37.13"H x 10.00"D	10.75 CU. FT.
R4 LOWER	ROLL-UP	46.00"W x 30.00"H	50.06"W x 30.00"H x 23.93"D	20.80 CU. FT.
			TOTAL VOLUME	178.70 CU. FT.

COMPARTMENT SHELVES/DRAWERS	
L1	(1) ADJUSTABLE SHELF, (1) FIXED VERTICAL DIVIDER, (1) ADJUSTABLE ROLL-OUT DRAWER
L2	(1) ADJUSTABLE SHELF
L3	(1) ADJUSTABLE SWING-OUT TOOL BOARD
L4	(1) ADJUSTABLE SHELF, (1) SLIDE-MASTER TRAY
R1	(2) ADJUSTABLE SHELVES, (1) FIXED VERTICAL DIVIDER, (1) SLIDE-MASTER TRAY
R2	(1) ADJUSTABLE SHELF
R3	NONE
R4	(1) ADJUSTABLE SHELF

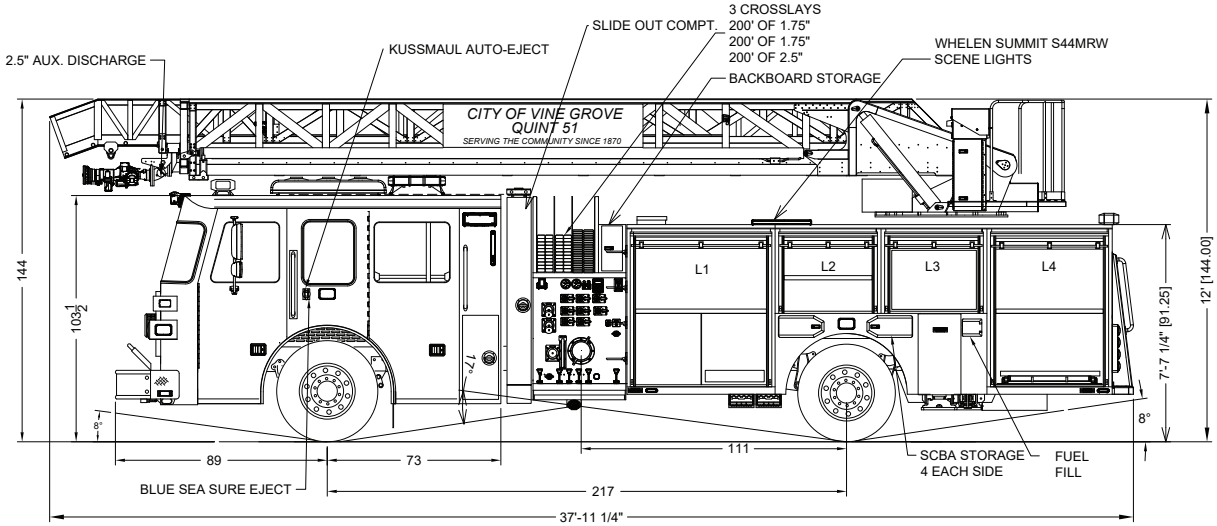

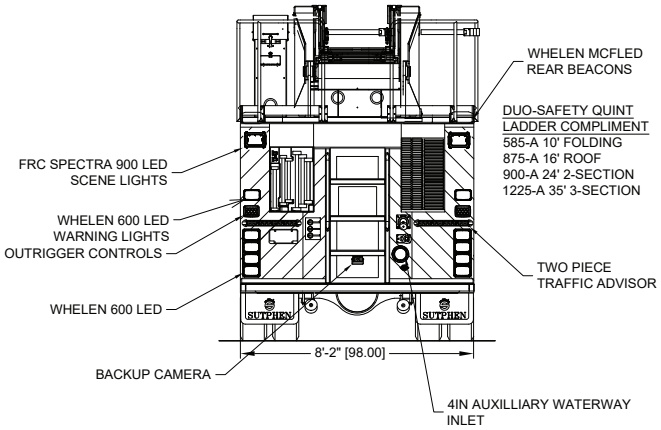

DIMENSIONS SHOWN ON THIS DRAWING ARE APPROXIMATE AND ARE SUBJECT TO MINOR DEVIATIONS DURING CONSTRUCTION.

IN THE EVENT OF A DISCREPANCY BETWEEN THE SUTPHEN SPECIFICATIONS AND DRAWING, THE SUTPHEN SPECIFICATIONS SHALL PREVAIL.

DRAWING IS FOR REFERENCE ONLY. SOME ITEMS PROPOSED MAY NOT BE SHOWN OR NOTED.

CUSTOMER APPROVAL

NAME:

TITLE:

DATE:

REV.	DESCRIPTION	BY	DATE
A	POST-PRECON	SJG	8/3/23

THIS PRINT IS PROVIDED ON A RESTRICTED BASIS AND IS NOT TO BE USED IN ANY WAY DETRIMENTAL TO THE INTEREST OF SUTPHEN CORPORATION.

DRAWN BY: SJG

DATE: 7/19/23

MFG. FACILITY: HILLIARD

SUTPHEN

VINE GROVE FIRE DEPARTMENT
VINE GROVE, KY

SLR75

DWG. NO.: HS-7890